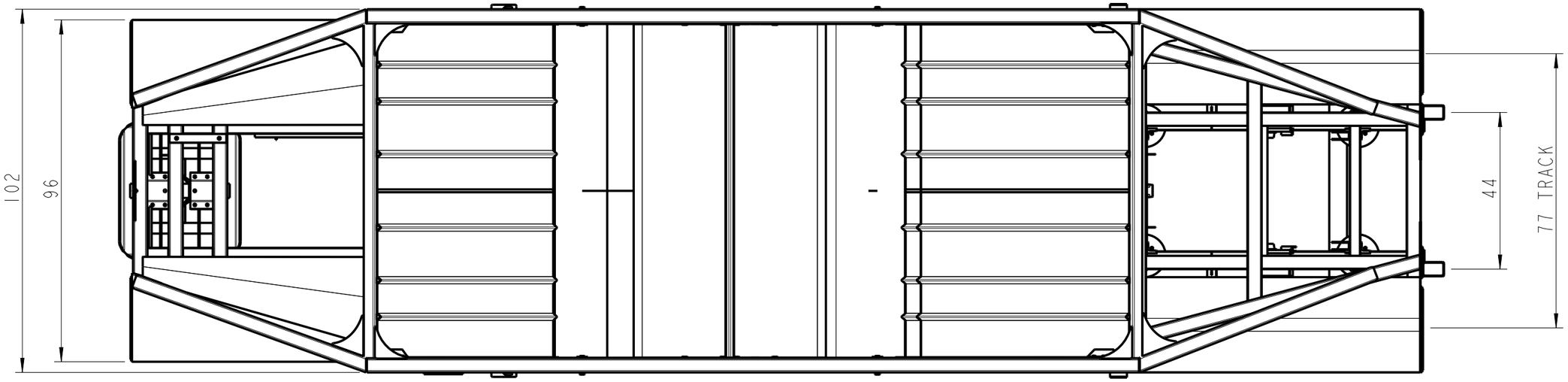

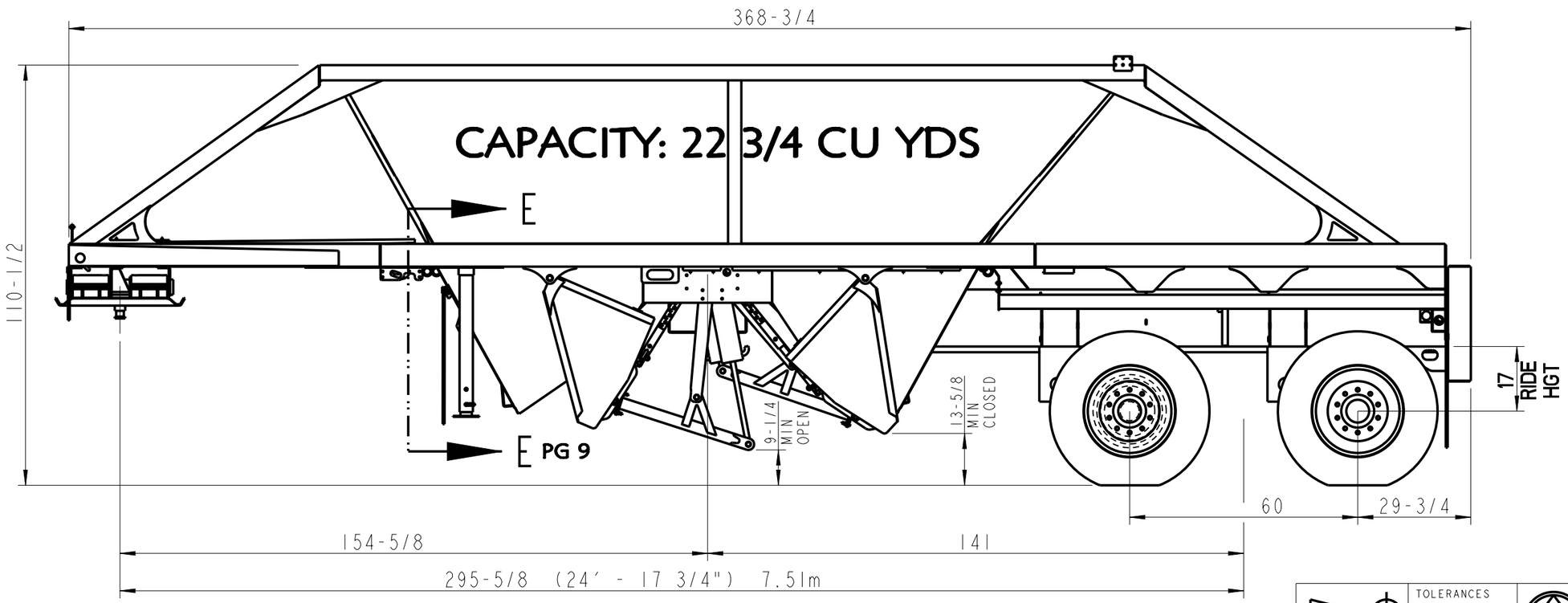

SUSP: HT230TB17-001
AXLE: 77" TRACK
VERIFY TIRES & RIMS WITH ORDER CONFIRMATION

TOLERANCES FRACTIONS ±1/16" DECIMALS ±0.06" ANGLES ±0.5°		ARNE'S	
DESCRIPTION: 2 BAY TDM AR 60" SPREAD CROSSGATE HOPPER			PAGE 1 OF 16
DRAWN BY: MC	DATE: MAR31/15	SCALE: 1:32	DRAWING NUMBER HH030600

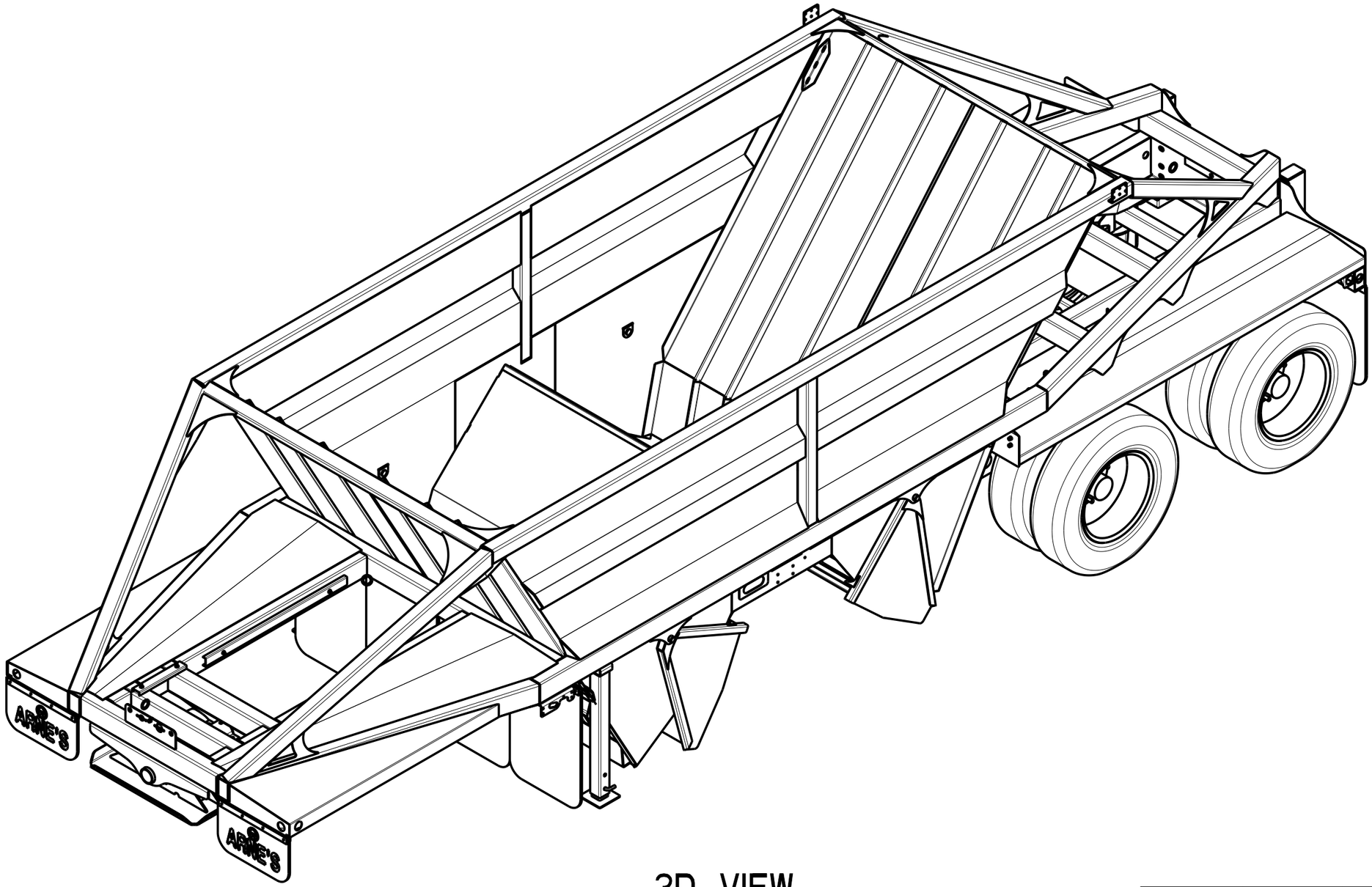

3D VIEW

	TOLERANCES FRACTIONS ±1/16" DECIMALS ±0.06" ANGLES ±0.5°		ARNE'S
DESCRIPTION: 2 BAY TDM AR 60" SPREAD CROSSGATE HOPPER			PAGE 2 OF 16
DRAWN BY: MC	DATE: MAR31/15	SCALE: 3:80	DRAWING NUMBER HH030600